Euro 3 evo

1/2

agg. 01/2021

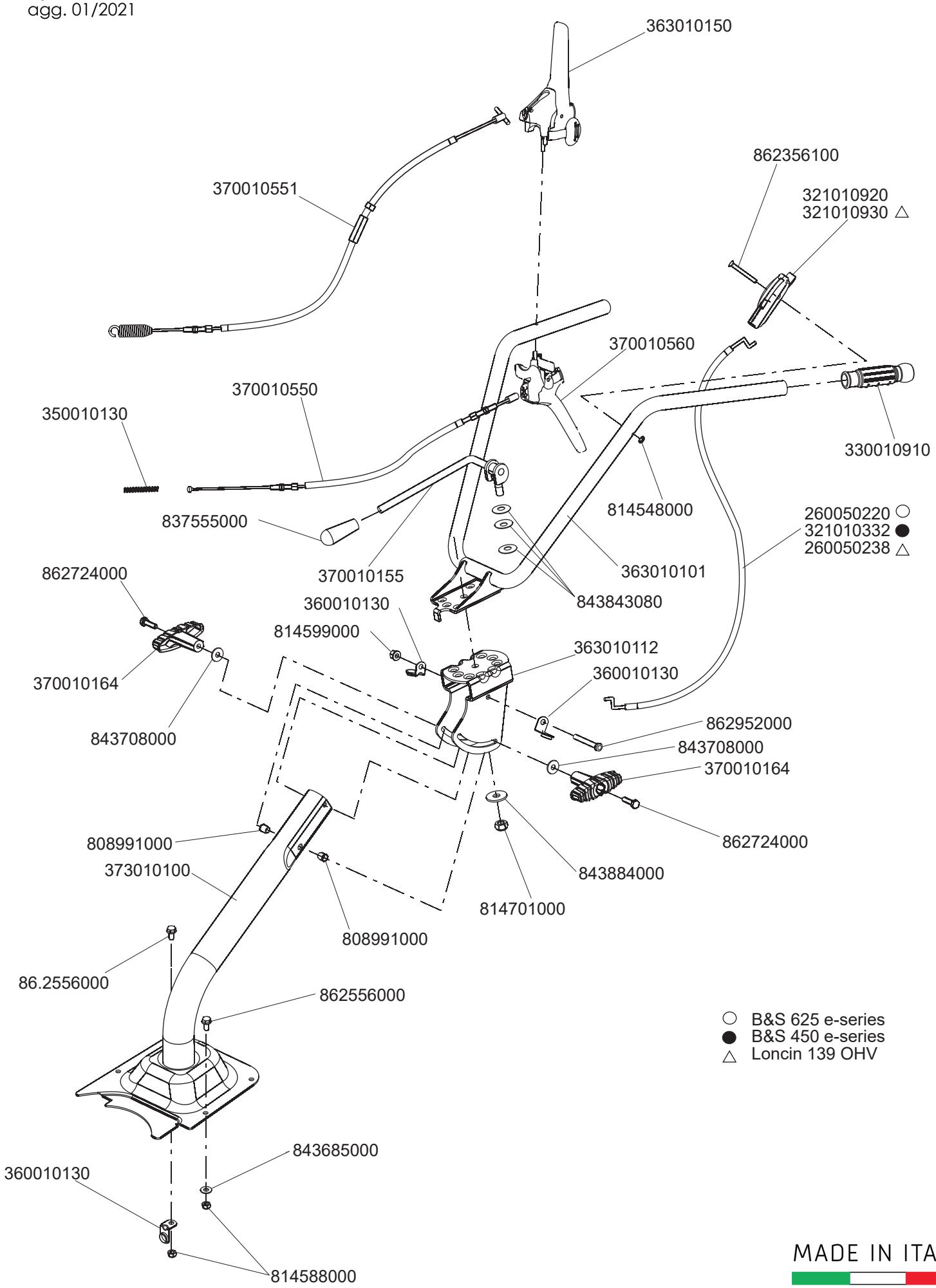

○ B&S 625 e-series
● B&S 450 e-series
△ Loncin 139 OHV

MADE IN ITALY

Euro 3 evo

2/2
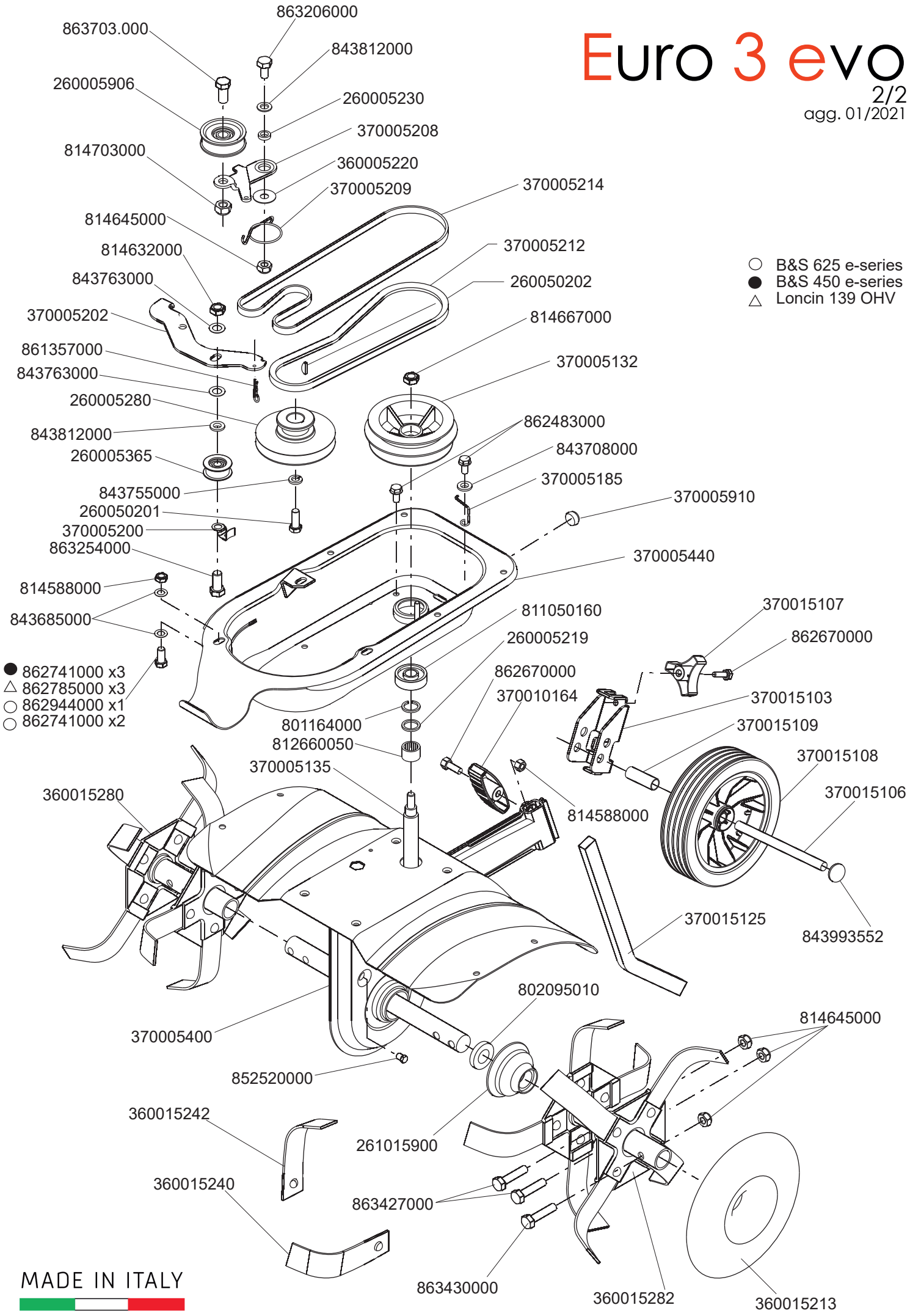
agg. 01/2021