ESPLOSO
EXPLODED VIEW

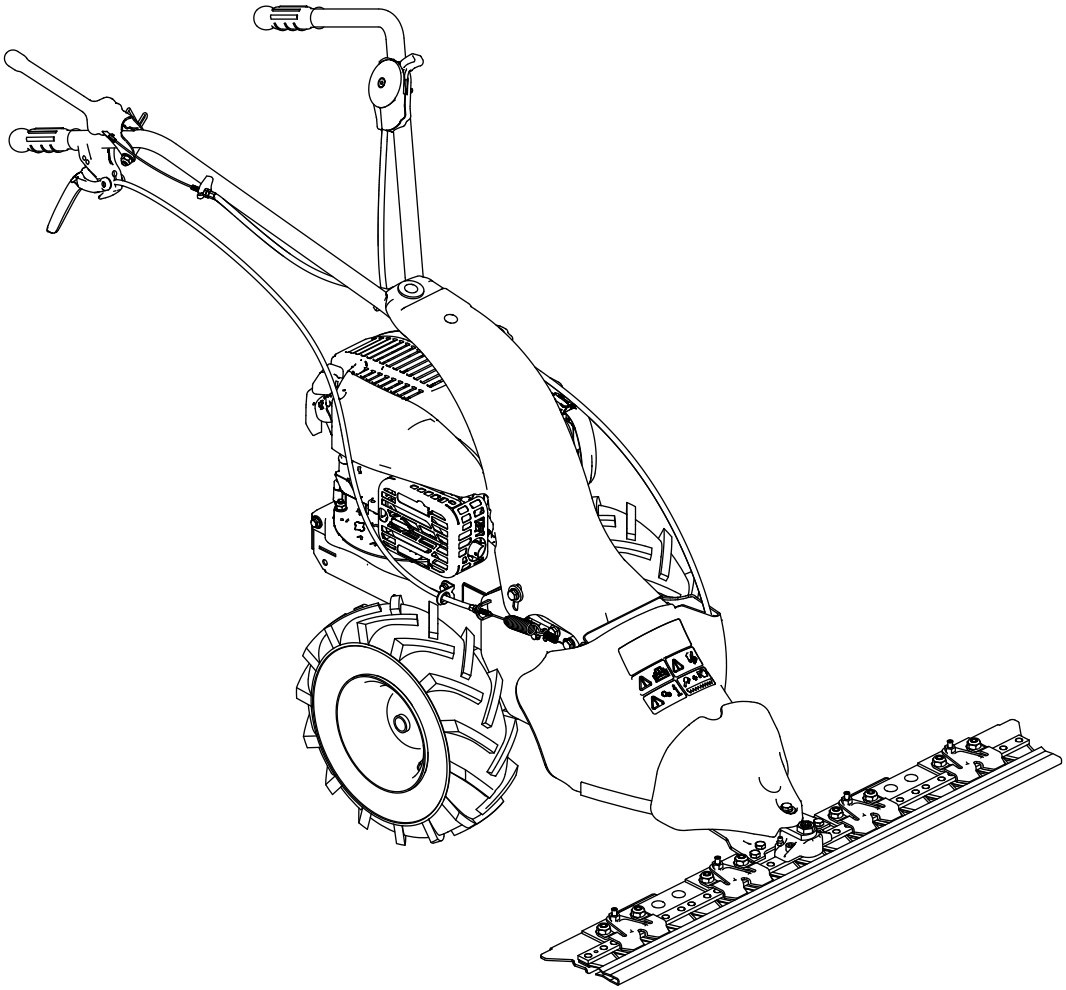

M90

03/2021

eurosystems

Via G.Pastore, 8 | Zona industriale | 42045 Luzzara (RE) | Italy | (**t**) +39 0522 977169 | (**f**) +39 0522 977819 |

(**m**) info@eurosystems-spa.com | (**w**) www.eurosystems-spa.com

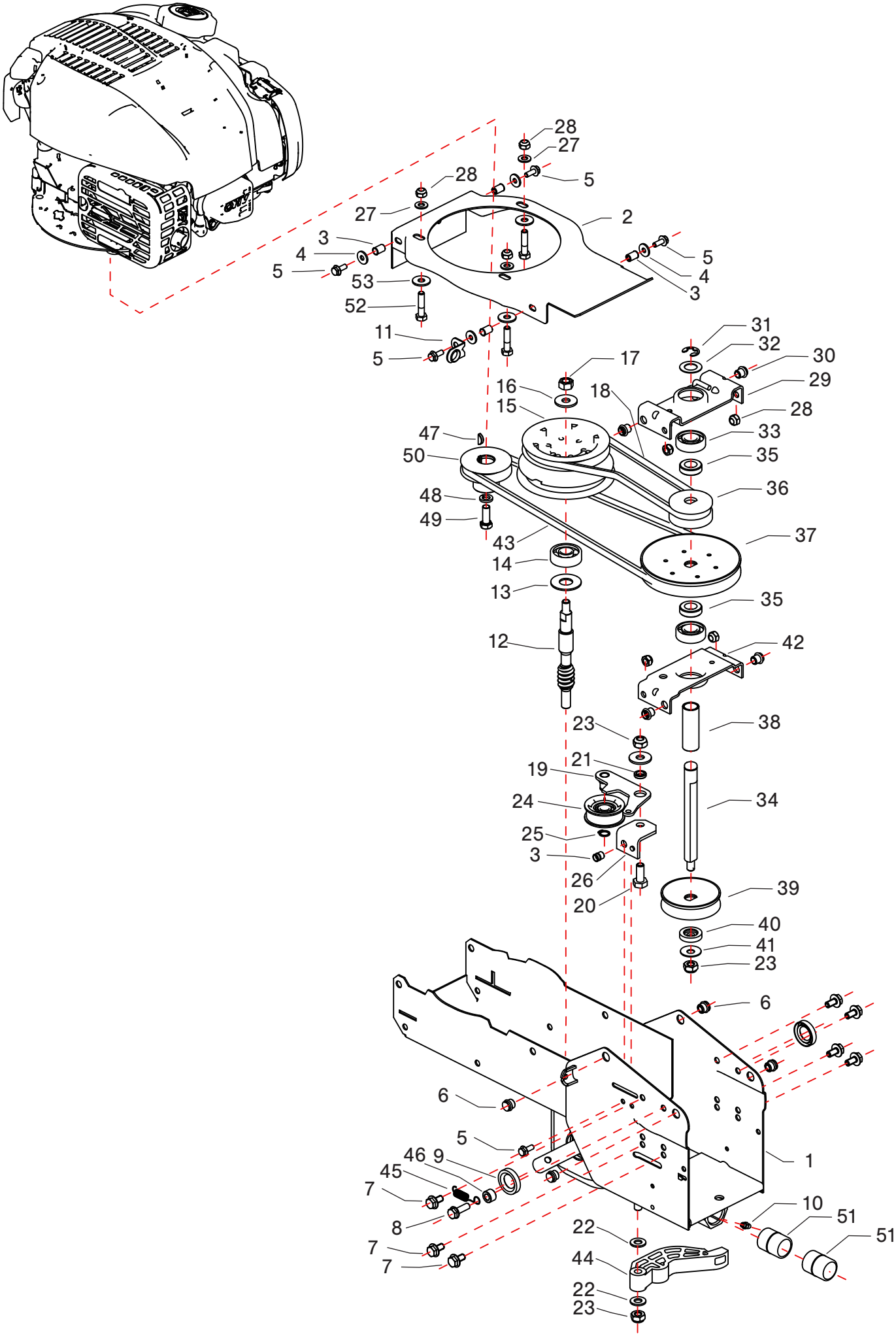
28
27
5
28
27
2
3
4
5
5
4
3
53
52
11
5
31
32
30
17
29
16
18
28
15
33
47
35
50
36
48
49
43
37
14
13
35
12
42
23
38
21
19
34
24
25
3
26
39
20
40
41
23
6
6
5
46
9
1
45
7
10
51
8
22
51
7
44
7
22
23

1	**321005720**	Telaio | Frame
2	**321005120**	Coperchio | Cover
3	**808990000**	Inserto filettato M6 | Threaded insert M6
4	**843619000**	Rosetta | Washer
5	**862120000**	Vite TE M6x16 flangiata | Flanged screw TE
6	**260050200**	Inserto filettato M8 | Threaded insert M8
7	**862494000**	Vite TE M8x16 flangiata | Flanged screw TE
8	**862685000**	Vite TE M8x25 flangiata | Flanged screw TE
9	**802060000**	Anello di tenuta | Sealing ring
10	**826016000**	Ingrassatore M6 | Greaser M6
11	**360010130**	Piastrina passafilo | Platelet Threader
12	**322005150**	Vite senza fine | Endless screw
13	**321005900**	Guarnizione olio | Oil seal
14	**811050160**	Cuscinetto | Bearing
15	**322005155**	Puleggia doppia | Double pulley
16	**843818000**	Rosetta | Washer
17	**814667000**	Dado M10x1 | Nut M10x1
18	**322005160**	Cinghia | Belt
19	**322005176**	Leva tendicinghia | Belt tensioner lever
20	**863254000**	Vite M10x25 | Screw M10x25
21	**260005230**	Distanziale | Spacer
22	**843812000**	Rosetta | Washer
23	**814645000**	Dado M10 | Nut M10
24	**322005900**	Ruota tendicinghia | Belt tensioner pulley
25	**801102000**	Anello seeger | Seeger ring
26	**321005408**	Supp. leva tendicinghia | Belt tensioner lever
27	**843685000**	Rosetta D8 | Washer
28	**814588000**	Dado M8 | Nut M8
29	**322005175**	Supporto superiore | Upper support
30	**808991000**	Inserto filettato M8 | Threaded insert M8
31	**801040060**	Anello benzing | Benzing ring
32	**270013596**	Distanziale | Spacer
33	**812586000**	Cuscinetto | Bearing
34	**322005182**	Albero | Shaft
35	**231005258**	Distanziale | Spacer
36	**322005185**	Puleggia | Pulley
37	**261005203**	Puleggia | Pulley
38	**321005715**	Distanziale | Spacer
39	**261005200**	Puleggia | Pulley
40	**260005232**	Distanziale | Spacer
41	**270015588**	Molla a tazza | Cup spring
42	**263005135**	Supporto | Support
43	**321005195**	Cinghia SPZ | Belt SPZ
44	**261005920**	Leva tendi attrezzi | tool tensioner lever
45	**231005903**	Molla | Spring
46	**220005199**	Distanziale | Spacer
47	**260050202**	Linguetta | Tongue
48	**843755000**	Rosetta | Washer
49	**260050201**	Vite TE 3/8x1 | Screw TE 3/8X1
50	**322025100**	Puleggia motore | Engine pulley
51	**261005901**	Boccola | Bush
52	**862741000**	Vite M8x35 | Screw M8x35 ○
---	**862785000**	Vite M8x40 | Screw M8x40 ●
53	**843708000**	Rosetta | Washer

○ B&S

● Loncin

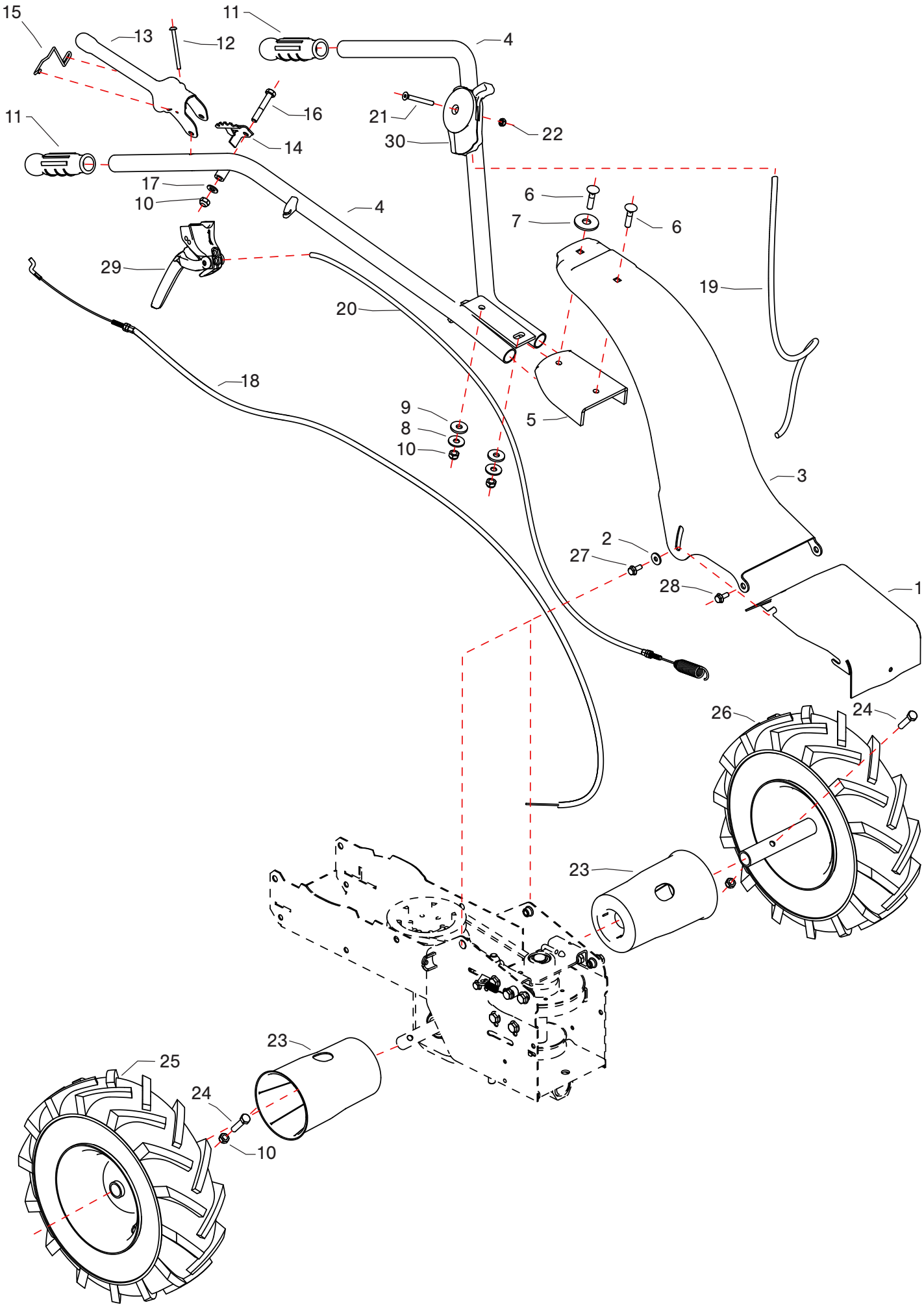
15
13
12
11
4
11
16
21
22
30
14
17
10
4
6
7
6
29
19
20
18
9
8
10
5
3
2
27
28
1
26
24
23
23
25
24
10

1	**322005111**	Coperchio telaio | Frame cover
2	**843711000**	Rosetta | Washer
3	**321010134**	Supporto stegola | Hendlebar support
4	**322010191**	Stegola | hendlebar
5	**321010902**	Fascia antivibrante | Antivibration band
6	**862786250**	Vite M8x35 | Screw M8x35
7	**843884000**	Rosetta | Washer
8	**843708000**	Rosetta | Washer
9	**321010901**	Rosetta | Washer
10	**814588000**	Dado M8 | Nut M8
11	**330010910**	Manopola | Knob
12	**861840275**	Vite M6x60 | Screw M6x60
13	**261010302**	Leva innesto attrezzi | Tool engagement lever
14	**261010304**	Piastra aggancio | Hooking plate
15	**261010305**	Molla blocca leva | Lever locking spring
16	**862881000**	Vite M8x50 | Screw M8x50
17	**843685000**	Rosetta | Washer
18	**322010400**	Trasmissione innesto attrezzo | Gear engagement transmission
19	**261050224**	Filo + guaina acc. | Full wire throttle
20	**322010305**	Trasmissione completa | Full trasmission
21	**862356200**	Vite M6x55 | Screw M6x55
22	**814548000**	Dado M6 | Nut M6
23	**321015905**	Parapolvere ruote | Wheel dust cover
24	**862860020**	Vite M8x35 | Screw M8x35
25	**321015262**	Ruota piena 13x5.00-6 DX | Full wheel R
26	**321015263**	Ruota piena 13x5.00-6 SX | Full wheel L
27	**862685000**	Vite TE M8x25 | Screw TE M8x25
28	**862494000**	Vite TE M8x16 | Screw TE M8x16
29	**360010185**	Leva singola | Single lever
30	**321010920**	Acceleratore completo | Full throttle

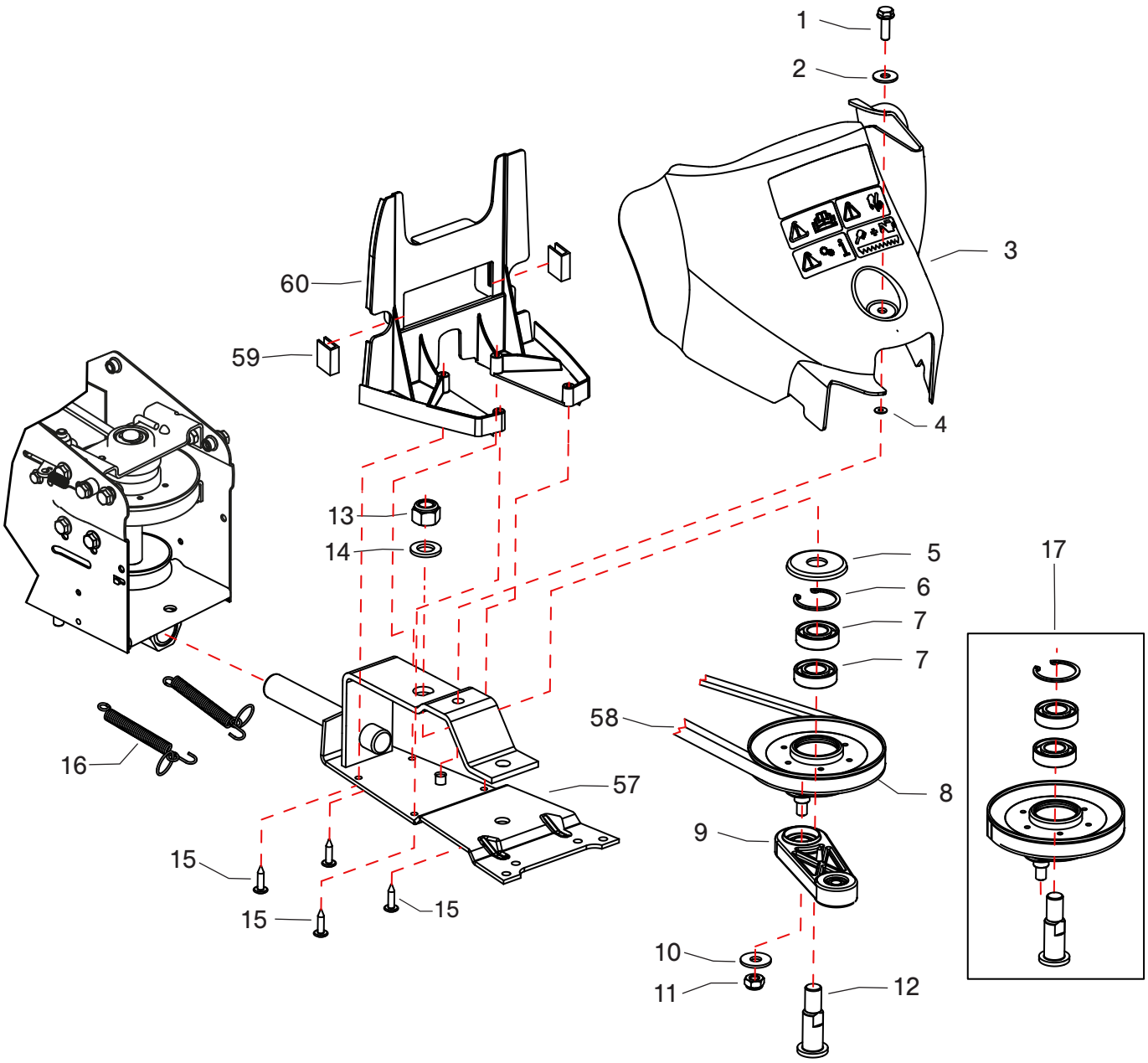

1	**862685000**	Vite TE M8x25 | Screw TE M8x25
2	**843708000**	Rosetta | Washer
3	**322020920**	Cofano posteriore | Rear cover
4	**843720000**	Rondella nylon | Nylon washer
5	**261005215**	Distanziale | Spacer
6	**801309000**	Seeger | Seeger
7	**812632000**	Cuscinetto | Bearing
8	**261005210**	Puleggia | Pulley
9	**322020900**	Biella | Rod
10	**843818000**	Rosetta | Washer
11	**814645000**	Dado M10 | Nut M10
12	**261005214**	Perno puleggia | Pulley pin
13	**814794000**	Dado M16 | Nut M16
14	**843994000**	Rosetta | Washer
15	**863988200**	Vite a disegno | Screw
16	**321300282**	Molla | Spring
17	**261005217**	Kit puleggia | Pulley kit
18	**401020123**	Boccola | Bush
19	**322020910**	Cofano anteriore | Front cover
20	**220010909**	Passafilo | Threader
21	**863432000**	Vite | Screw
22	**322020120**	Bilanciere | Balancer
23	**261005247**	Parapolvere bilanciere | Dust cover
24	**814750020**	Dado M14 | Nut M14
25	**322020140**	Vite M14x35 | Screw M14x35
26	**826016000**	Ingrassatore M6 | Greaser M6
27	**812687000**	Astuccio | Case
28	**261005224**	Distanziale | Spacer
29	**270011715**	Distanziale | Spacer
30	**803208000**	Anello OR | OR
31	**261005244**	Boccola bilanciere | Balancer bush
32	**862474050**	Vite M8x14 | Screw M8x14

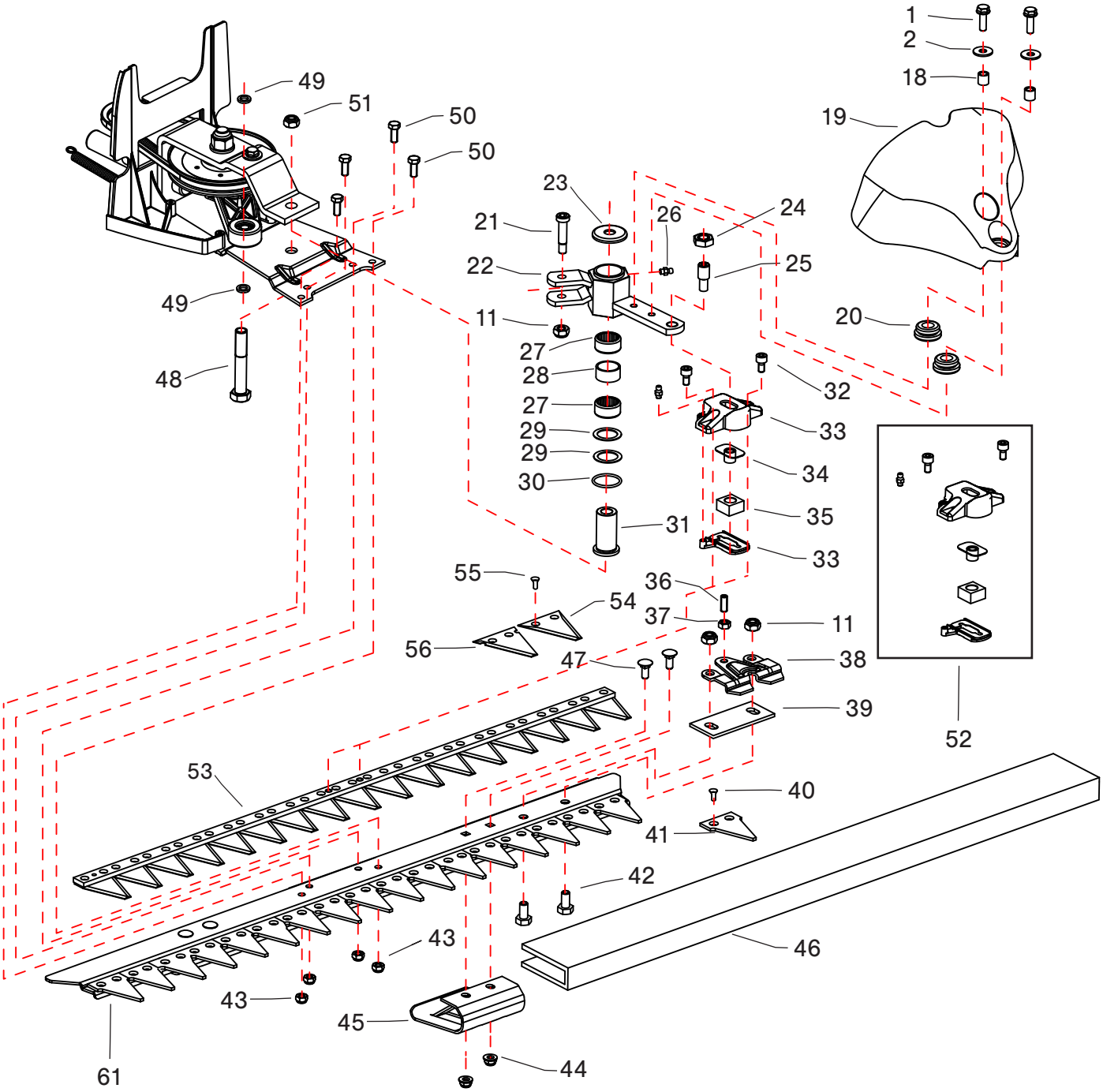

33	**322020906**	Kit scatola | Box kit
34	**322020908**	Kit boccola | Bush kit
35	**322020141**	Tassello comando | Plug
36	**862672000**	Vite M8x20 | Screw M8x20
37	**814574000**	Dado M8 | Nut M8
38	**261020112**	Piastra registro barra | Bar registrer plate
39	**261020114**	Guida post. lama | Rear blade guide
40	**808866000**	Ribattino | Rivet
41	**261020057**	Piastrina | platelet
42	**863206000**	Vite M10x20 | Screw M10x20
43	**814588000**	Dado M8 | Nut M8
44	**814599000**	Dado flangiato M8 | Nut flange M8
45	**322020116**	Slitta | sleigh
46	**261020115**	Protezione lama | Blade protection
47	**862786100**	Vite M8x20 | Screw M8x20
48	**864334000**	Vite M14x85 | Screw M14x85
49	**322020132**	Distanziale | Spacer
50	**862555000**	Vite M8x20 | Screw M8x20
51	**814767000**	Dado M14 | Nut M14
52	**322020905**	Kit scatola | Box kit
53	**261020027**	Lama superiore | Upper blade
54	**261020065**	Dente superiore | Upper tooth
55	**808867000**	Ribattino | Rivet
56	**261020067**	Dente superiore | Upper tooth
57	**322020109**	Supporto barra | Bar support
58	**322020135**	Cinghia | Belt
59	**322020160**	Graffetta | Clip
60	**322020930**	Supporto di protezione | Protection support
61	**322020150**	Corpo barra falciante | Cutter bar body